FT10MxLR

650 nm DC-10 MBd RedLink® Fiber Optic Transmitter

Datasheet

DESCRIPTION

The Firecomms DC to 10 MBd low current RedLink® transmitter is a highly reliable Resonant Cavity Light Emitting Diode (RCLED) which operates as a visible optical source generating red 650 nm light at data rates from burst mode DC to a maximum of 10 MBd of continuous digital data. The RCLED is encapsulated in a lensed clear molded plastic package for optimum coupling to Plastic Optic Fiber (POF). It operates over the industrial temperature range of -40 °C to +85 °C.

The 10 MBd transmitter produces higher optical power for the same input current relative to the standard Firecomms 10 MBd device (FT10MHNR). This allows a lower overall current consumption when used in an existing link design.

The transmitter is assembled in a gray non-conducting plastic housing requiring low operating current supporting horizontal, vertical and tilted housing options. The use of the eye-safe, visible light simplifies link set-up and testing.

AVAILABLE OPTIONS

Table 1
ORDERING INFORMATION / PART NUMBERS

10 MBd Horizontal Package Non-Inverting, TTL	FT10MHLR
10 MBd Vertical Package Non-Inverting, TTL	FT10MVLR
10 MBd Tilted Package Non-Inverting, TTL	FT10MWLR

FEATURES

- Visible RCLED at red wavelength (660 nm)
- Optimized for data transmission from DC to 10 MBd with low current consumption
- Ideal for use with Step Index (SI) Plastic Optic Fiber (POF)
- Industrial temperature range -40 °C to +85 °C
- RoHS compliant
- Flame retardant (UL 94 V-0) connector housings
- Low pulse width distortion
- Horizontal, Vertical and 30° Tilted options available
- Compatible with Versatile Link cables and connectors

APPLICATIONS

Table 2
APPLICATIONS

Application	Automation and Industrial Control, Low-Speed Serial Communications, Voltage Isolation
Standard	Serial RS232, RS485, CAN Bus, Modbus, Profibus, Sercos
Distance	50 meters Step Index (SI) POF [1]
Speed	DC to 10 MBd

Note: 1. Depending on the installation conditions and assuming a Firecomms 10 MBd receiver

SPECIFICATIONS

Table 3
TRANSMITTER PIN DESCRIPTION

Pin	Name	Symbol
1	RCLED ANODE	TD +
2	RCLED CATHODE	TD -
3	Not Connected	N.C. / Gnd
4	Not Connected	N.C. / Gnd
5	Retaining Pin	Gnd
8	Retaining Pin	Gnd

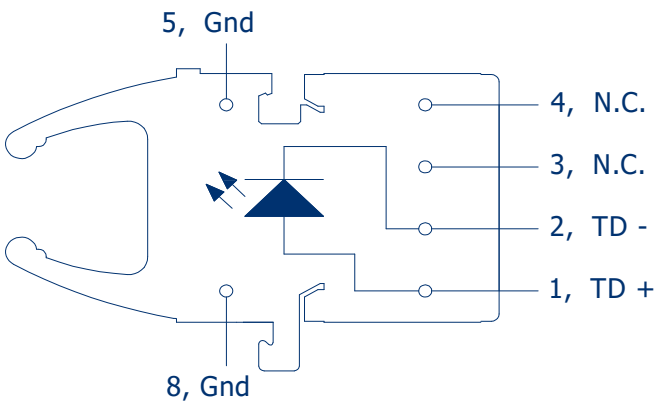

FIGURE 1
Transmitter pin-out, top view

Table 4
REGULATORY COMPLIANCE

Parameter	Symbol	Standard	Level
Electrostatic Discharge, Human Body Model (contact ESD)	HBM	Mil-STD-883	Level 2 (4 kV)
Radiated Emissions Immunity	Vm^{-1}	IEC 61000-4-3	15 Vm^{-1}
UL Certification	UL	60950-1	File No. E362227 Tilted Package: UL Pending
Storage Compliance	MSL	J-STD-020	2a (4-week floor life)
Restriction of Hazardous Substances Directive	RoHS	Directive 2011/65/EU	Certified compliant

RECOMMENDED APPLICATION CIRCUIT

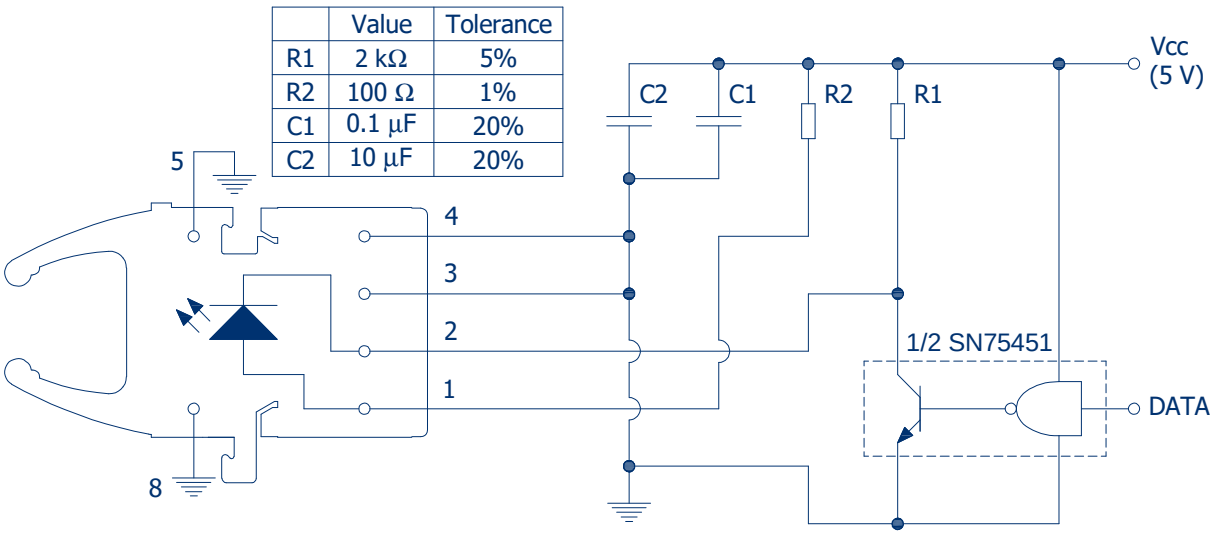

FIGURE 2
Recommended transmitter application circuit. See note 6 Table 6

SPECIFICATIONS

Table 5
ABSOLUTE MAXIMUM RATINGS

These are the absolute maximum ratings at or beyond which the part can be expected to be damaged
Notes:

1. *260 °C for 10 seconds, one time only, at least 2.2 mm away from lead root*
2. *When peak forward current exceeds 30 mA, the duty cycle must maintain a pulse width (PW) less than 1 µs and average forward current less than or equal to 30 mA. [30 mA ≤ I_{FPK} ≤ 45 mA ↔ I_{FAVG}≤ 30 mA AND PW ≤ 1 µs]*

Parameter	Symbol	Minimum	Maximum	Unit
Storage Temperature	T_{stg}	-40	+85	°C
Operating Temperature	T_{op}	-40	+85	°C
Soldering Temperature [1]	T_{sld}		+260 [1]	°C
TX Reverse Input Voltage	V_R		3	V
TX Peak Forward Input Current[2]	I_{FPK}		45	mA
Average Forward Input Current[2]	I_{FAVG}		30	mA

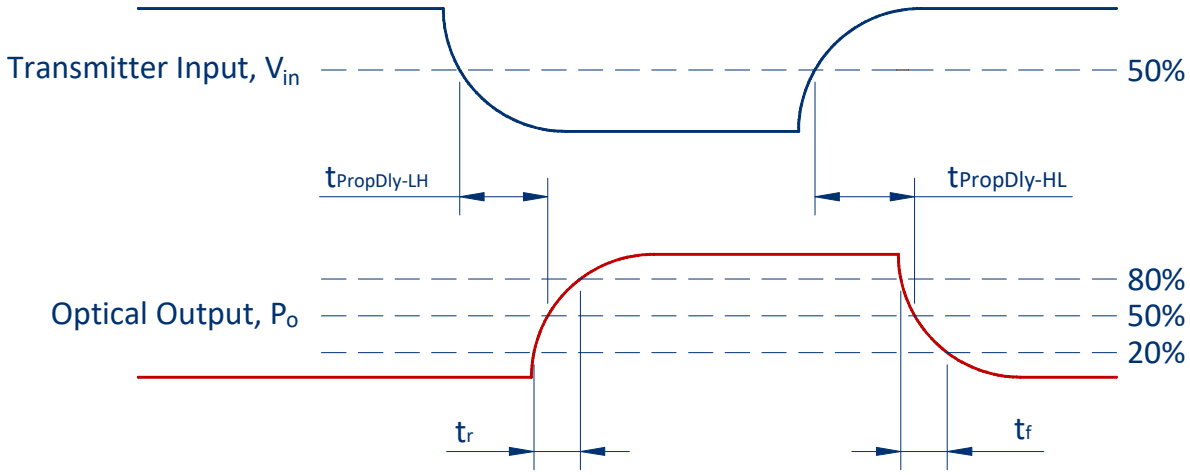

FIGURE 3
Transmitter Propagation Delay and rise/fall time definitions as per application circuit of Figure 2

SPECIFICATIONS

Table 6
TRANSMITTER ELECTRICAL AND OPTICAL CHARACTERISTICS

Test Conditions:

1. *Test data was validated over the full temperature range of -40 °C to +85 °C, and over the full drive current range*
2. *Optical power for POF is measured when coupled into 0.5 m of a 1 mm diameter 0.5 NA POF and a large area detector*
3. *As measured in the given application circuit (inverting) as shown in Figure 2 with 50 cm of 0.5 NA POF*
4. *Emission Wavelength (centroid)* $\lambda_c = \Sigma_i P_i . \lambda_i / \Sigma_i P_i$ *(Ref: EIA/TIA std. FOTP-127/6.1, 1991)*
5. Spectral Width Root Mean Squared (*RMS*) $\lambda_{RMS} = (\Sigma_i P_i(\lambda_c - \lambda_i)^2 / \Sigma_i P_i)^{1/2}$. *(Ref: EIA/TIA std. FOTP-127/6.3, 1991)*
6. *Pins 5 and 8 are used for mounting and retaining purposes only. Connect to ground.*

Parameter	Symbol	Min	Typical	Max	Unit	Test Condition
Output Power	P	-3	+2	+4	dBm	1 mm POF I_{FDC} = 30 mA
		-9	-3	-1	dBm	1 mm POF I_{FDC} = 10 mA
		-11	-5	-3	dBm	1 mm POF I_{FDC} = 5 mA
		-14	-8	-6	dBm	1 mm POF I_{FDC} = 3 mA
		-20	-15	-12	dBm	200 µm PCS I_{FDC} = 30 mA
Emission Wavelength (centroid) [4]	λ_c	640	660	680	nm	I_{FDC} = 30 mA
Spectral Width (RMS) [5]	λ_{RMS}		11	20	nm	I_{FDC} = 30 mA
Forward Voltage	V_F	1.4	1.95	2.4	V	I_{FDC} = 30 mA
Forward Voltage Temperature Coefficient	$\Delta V_F/\Delta T$		-3.5		mV/°C	I_{FDC} = 30 mA
Reverse Input Breakdown Voltage	V_{BR}	20			V	I_{FDC} = -1 µA
Diode Capacitance	C_o		11		pF	V = 0 V
Data Rate		DC		10	MBd	
Optical Rise Time (20 % - 80 %)	t_r		5	7	ns	I_{FAVG} = 15 mA [3]
Optical Fall Time (80 % - 20 %)	t_f		7	9	ns	I_{FAVG} = 15 mA [3]
Propagation Delay Low-to-High (Electrical-to-Optical)	PropDly_ LtoH (EL/OP)	18	22	28	ns	I_{FAVG} = 15 mA [3]
Propagation Delay High-to-Low (Electrical-to-Optical)	PropDly_ HtoL (EL/OP)	16	24	36	ns	I_{FAVG} = 15 mA [3]
Pulse Width Distortion	PWD	-2	2	8	ns	I_{FAVG} = 15 mA [3]

SPECIFICATIONS

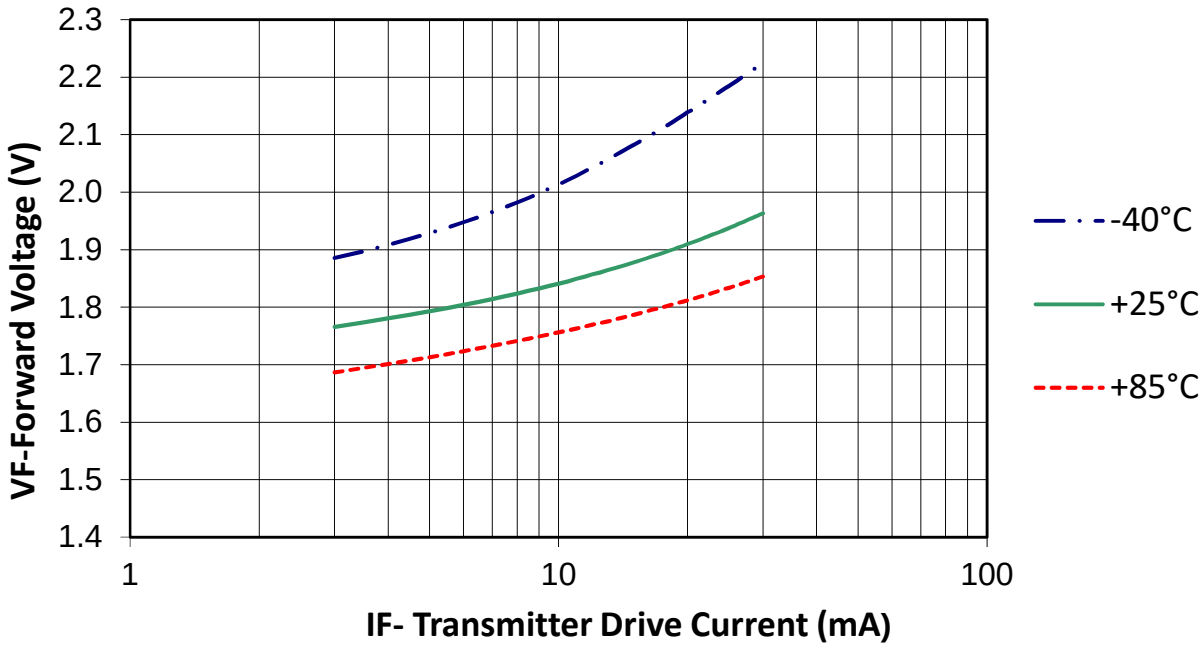

FIGURE 4
Typical forward voltage (VF) vs. drive current (IF,DC)

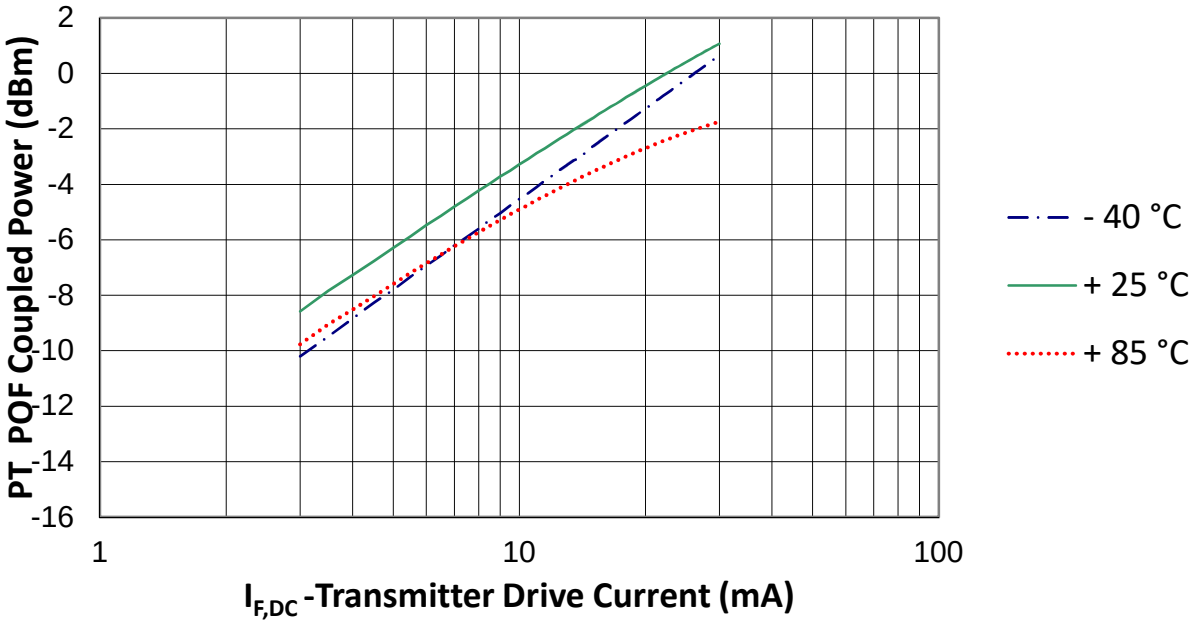

FIGURE 5
Typical normalized optical power vs. drive current

MECHANICAL DATA, HORIZONTAL

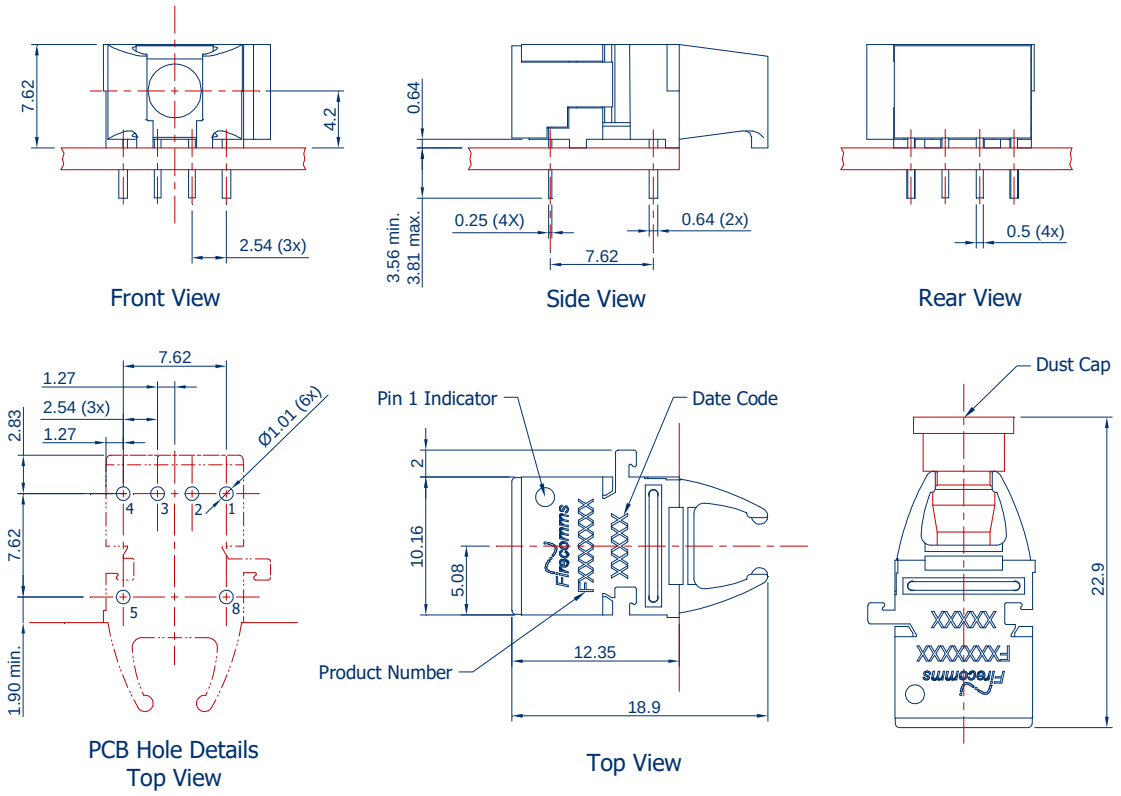

FIGURE 6
Mechanical dimensions of the horizontal connectors and PCB footprint, which is a top view
General dimensional tolerance is ± 0.2 mm

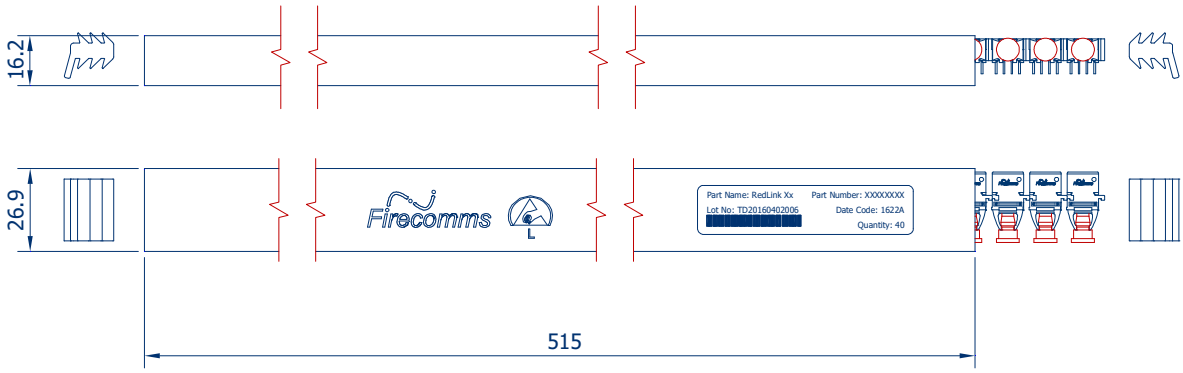

FIGURE 7
Packing tube for Firecomms Horizontal RedLink® Transmitters

MECHANICAL DATA, VERTICAL

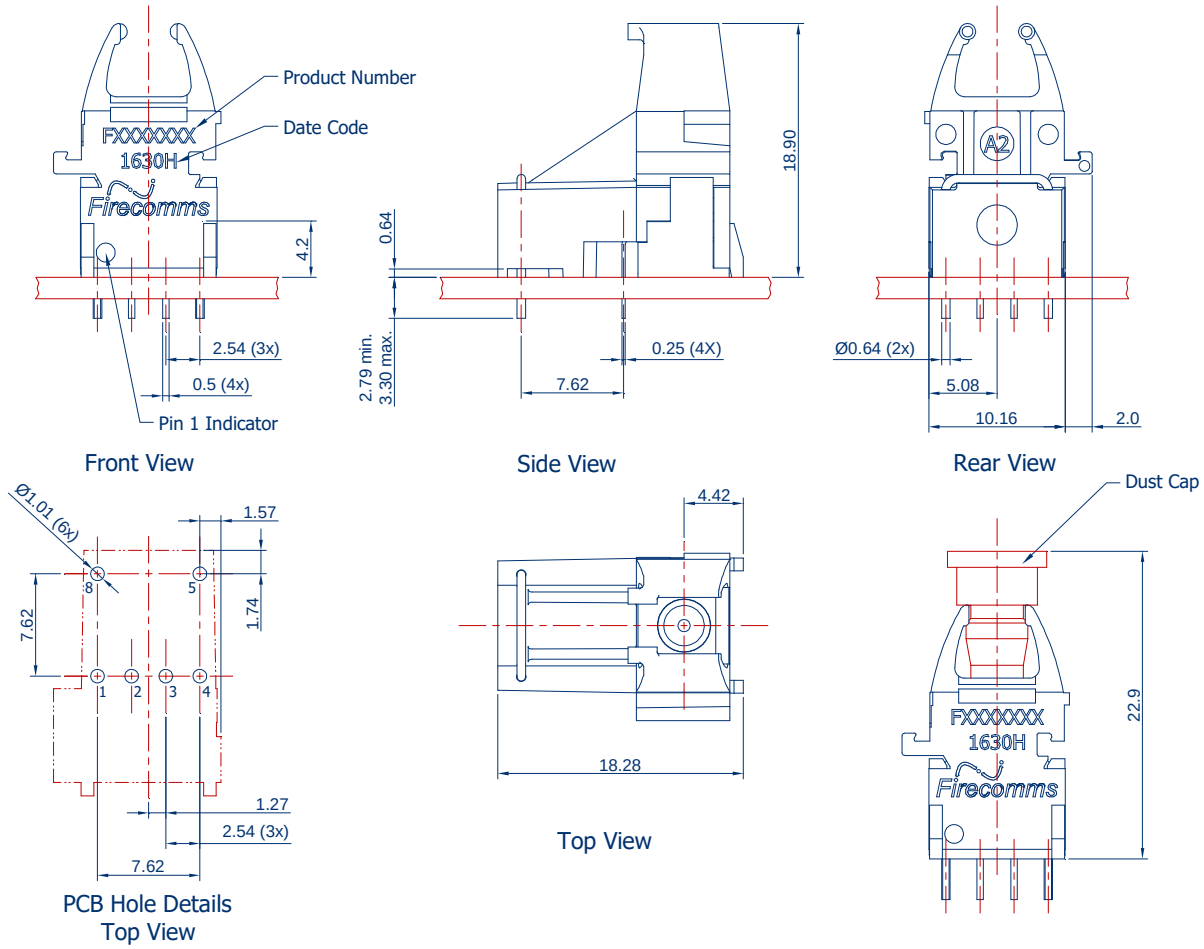

FIGURE 8
Mechanical dimensions of the vertical transmitter connectors and PCB footprint, which is a top view
General dimensional tolerance is ± 0.2 mm

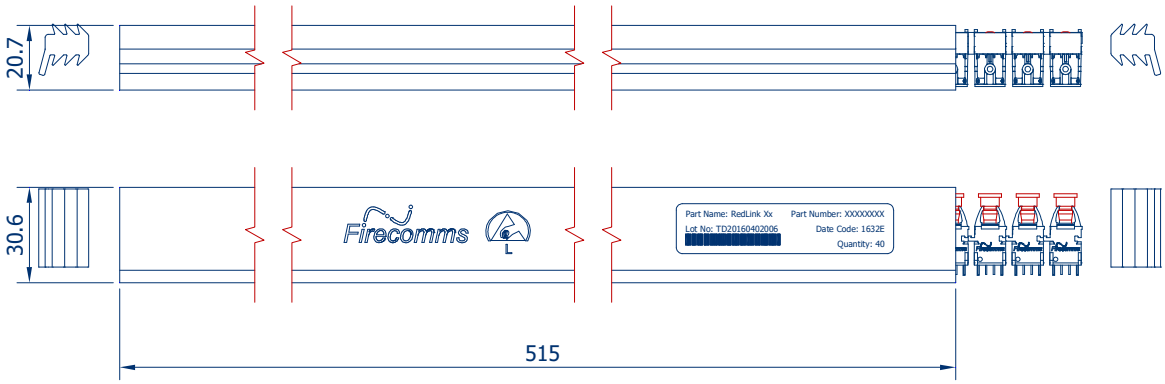

FIGURE 9
Packing tube for Firecomms Vertical RedLink® Transmitters

MECHANICAL DATA, 30° TILTED

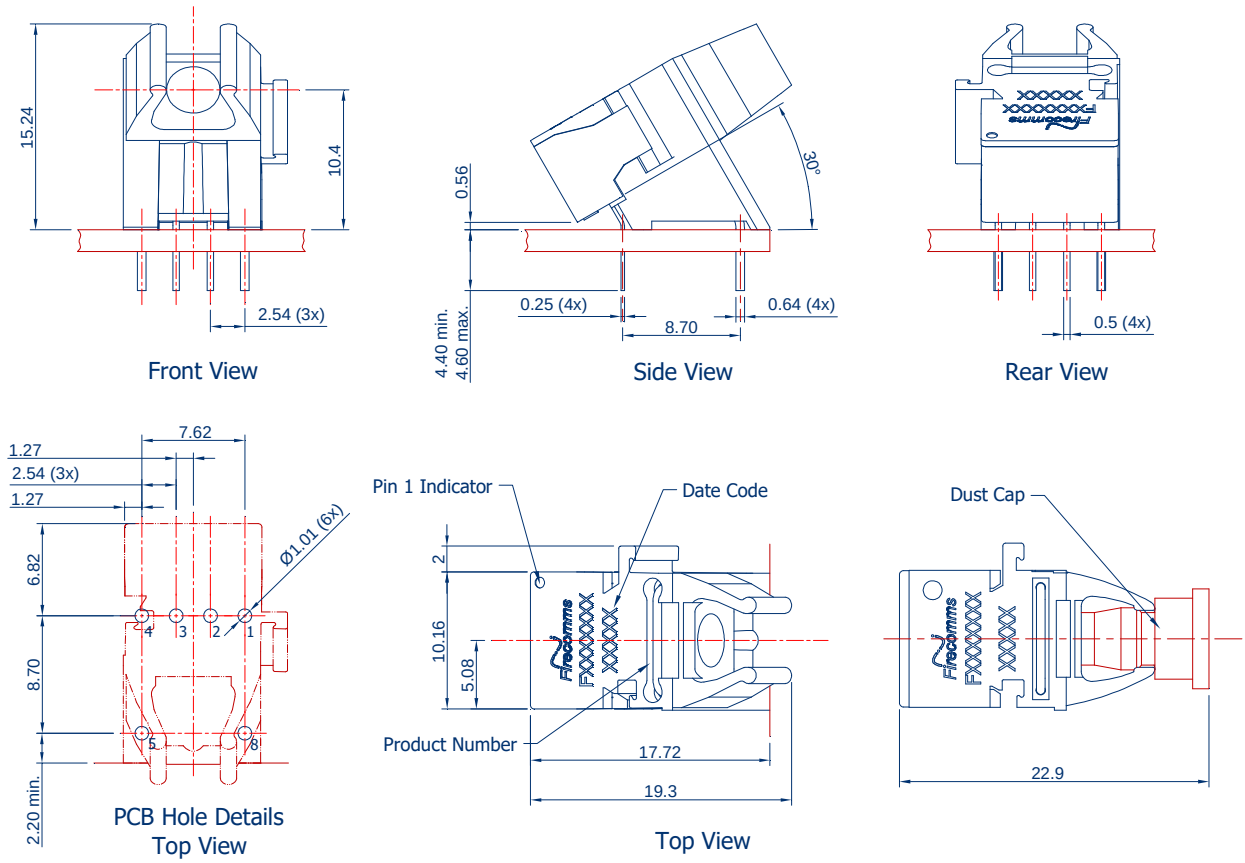

FIGURE 10
Mechanical dimensions of the tilted transmitter connectors and PCB footprint, which is a top view
General dimensional tolerance is ± 0.2 mm

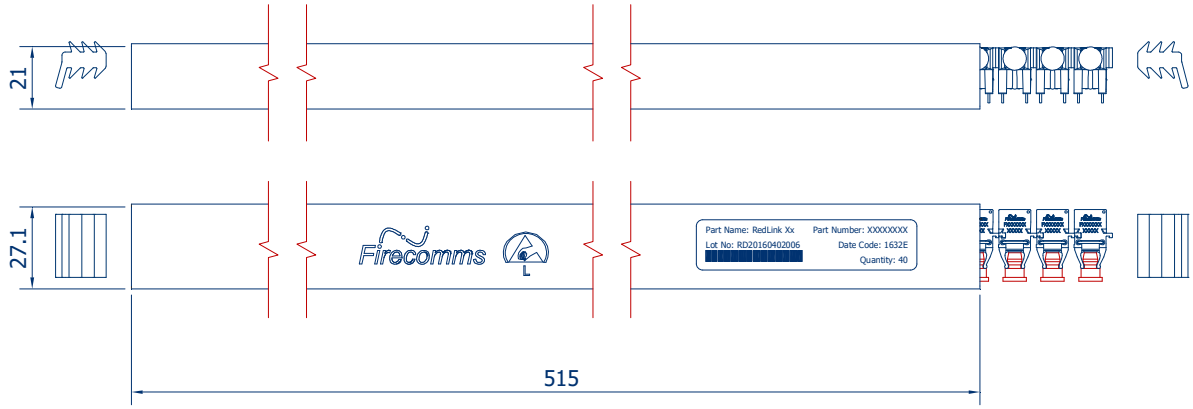

FIGURE 11
Packing tube for Firecomms Tilted RedLink® Transmitter

PART HANDLING

The Firecomms DC-10 MBd 650 nm RedLink® transmitter devices are color coded gray. They are auto-insertable. They are tested for handling in static-controlled assembly processes (HBM). Cleaning, degreasing and post solder washing should be carried out using standard solutions compatible with both plastics and the environment. For example, recommended solutions for degreasing are alcohols (methyl, isopropyl and isobutyl). Acetone, ethyl acetate, phenol or similar solution based products are not permitted.

In the soldering process, non-halogenated water soluble fluxes are recommended. These products are not suitable for use in reflow solder processes (infrared/vapor-phase reflow). The dust plug should remain in place during soldering, washing and drying processes to avoid contamination of the active optical area of each part.

The Moisture Sensitivity Level (MSL) classification of this device is 2a according to JEDEC J-STD-020.
The shelf life of an unopened MBB (Moisture Barrier Bag) is 24 months at < 40 °C and < 90 % R.H.
Once the Moisture Barrier Bag is opened the devices can be either

a) Stored in normal factory conditions < 30 °C and < 60 % R.H. for a maximum of 672 hours (4 Weeks) prior to soldering
b) Stored at < 10 % R.H. (Dry Cabinet)

PACKING INFORMATION

Components are packed in PVC anti-static tubes in moisture barrier bags. Bags should be opened only in static-controlled locations, and standard procedures should be followed for handling moisture sensitive components.

Table 7
PACKING INFORMATION

		Horizontal	Vertical	Tilted
Components per Tube		40	40	40
	Tube Length	515 mm	515 mm	515 mm
	Tube Height	16.2 mm	20.7 mm	21 mm
	Tube Depth	26.9 mm	30.6 mm	27.1 mm
Tubes per Bag		5	5	5
Bags per Inner Carton		1	1	1
	Inner Carton Length	630 mm	630 mm	630 mm
	Inner Carton Width	70 mm	70 mm	70 mm
	Inner Carton Height	105 mm	105 mm	105 mm
Weight per Inner Carton, Complete		0.77 kg	0.92 kg	0.92 kg
Components per Inner Carton		200	200	200
Inner Cartons per Outer Carton		10	10	10
	Outer Carton Length	650 mm	650 mm	650 mm
	Outer Carton Width	235 mm	235 mm	235 mm
	Outer Carton Height	376 mm	376 mm	376 mm
Weight per Outer Carton, Complete		8.13 kg	9.60 kg	9.60 kg
Components per Outer Carton		2,000	2,000	2,000

For the most recent revision or further information please visit www.firecomms.com or contact the company directly at the following address, Firecomms Ltd, 2200 Airport Business Park, Cork, IRELAND. Copyright© 2004-2018 Firecomms. All rights reserved. Firecomms refers to Firecomms Limited and/or its subsidiaries. Firecomms assumes no responsibility for inaccuracies or omissions in the information contained in this document. Specifications are subject to change without notice. No patent rights are granted to any of the circuits described herein.