# FT10DxxR

## 650 nm DC-10 MBd Fully Integrated RedLink® Fiber Optic Transmitter

## Datasheet

## DESCRIPTION

The Firecomms DC-10 MBd RedLink® transmitter consists of a highly reliable Resonant Cavity Light Emitting Diode (RCLED) with integrated driver IC as a visible optical transmitter. The device is housed in a miniature package to interface to plug-terminated lengths of Plastic Optic Fiber (POF) or 200 µm Plastic Clad Silica (PCS) fiber.

It is capable of delivering 10 MBd digital signals over fiber and operate in the temperature range of -40 °C to +85 °C. The device can operate from a 5 V or 3.3 V DC power rail and can tolerate ± 10 % supply variation.

The transmitter contains a visible red wavelength RCLED with fully integrated precision driver IC. The use of intrinsically eye-safe, visible light simplifies link set-up and testing. It is available in Inverting and Non-inverting options.

## AVAILABLE OPTIONS

**Table 1**
**ORDERING INFORMATION / PART NUMBERS**

| | |
|---|---|
| **10 MBd Horizontal Package Non-Inverting, TTL** | FT10DHNR |
| **10 MBd Horizontal Package Inverting, TTL** | FT10DHIR |
| **10 MBd Vertical Package Non-Inverting, TTL** | FT10DVNR |
| **10 MBd Vertical Package Inverting, TTL** | FT10DVIR |
| **10 MBd Tilted Package Non-Inverting, TTL** | FT10DWNR |
| **10 MBd Tilted Package Inverting, TTL** | FT10DWIR |

## FEATURES

- Fully integrated driver IC with visible RCLED at red wavelength (650 nm)
- Optimized for data transmission from DC-10 MBd
- Industrial Temperature Range -40 °C to +85 °C
- Dual power supply operation (5 V, 3.3 V) with 10 % rail tolerance
- RoHS compliant and flame retardant (UL 94 V-0)
- Inverting and Non-Inverting options available
- Horizontal, Vertical and 30° Titled options available
- Compatible with Versatile Link cables and connectors

## APPLICATIONS

**Table 2**
**APPLICATIONS**

| | |
|---|---|
| **Application** | Automation and Industrial Control. Serial Communications. Voltage Isolation. |
| **Standard** | Serial RS232, RS485, CAN-Bus, MODBUS, Profibus |
| **Distance** | 50 meters Step Index POF [1]<br>100 meters with 200 µm PCS fiber [1] |
| **Speed** | DC to 10 MBd |

*Note: 1. Depending on the installation conditions*

## SPECIFICATIONS

**Table 3**
**TRANSMITTER PIN DESCRIPTION**

| Pin | Name | Symbol |
|---|---|---|
| 1 | Line Voltage | Vcc |
| 2 | No Pin Present | |
| 3 | GROUND | GND |
| 4 | Data Input (TTL) | D+ |
| 5 | Retaining Pin | GND |
| 8 | Retaining Pin | GND |

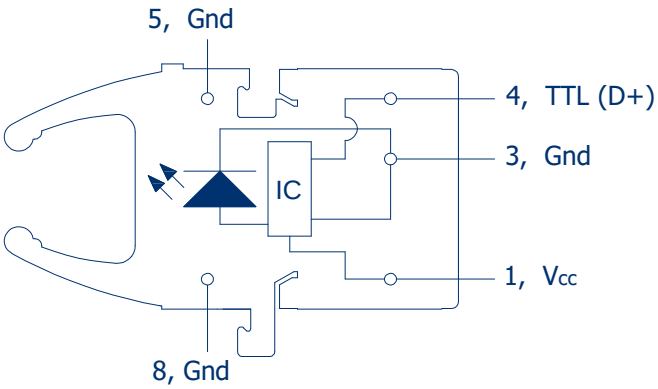


FIGURE 1
Transmitter pin-out, top view

**Table 4**
**REGULATORY COMPLIANCE**

| Parameter | Symbol | Standard | Level |
|---|---|---|---|
| Electrostatic Discharge, Human Body Model (contact ESD) | HBM | Mil-STD-883 | Level 2 (4 kV) |
| UL Certification | UL | 60950-1 | File No. E362227<br>Tilted Package: UL Pending |
| Storage Compliance | MSL | J-STD-020 | 2a (4-week floor life) |
| Restriction of Hazardous Substances Directive | RoHS | Directive 2011/65/EU | Certified compliant |
| Eye Safety | | IEC 60825-1 | LED Class 1 |

## RECOMMENDED APPLICATION CIRCUIT

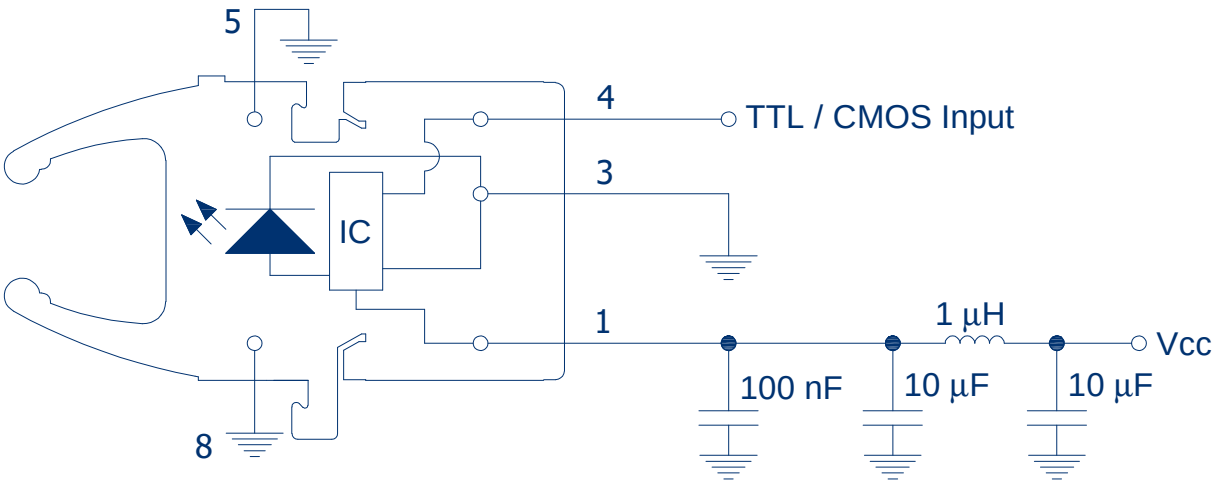


FIGURE 2
Recommended transmitter application circuit. See note 7 Table 6

## SPECIFICATIONS

**Table 5**
**ABSOLUTE MAXIMUM RATINGS**

*These are the absolute maximum ratings at or beyond which the FOT can be expected to be damaged*
*Notes:*
*1. 260°C for 10 seconds, one time only, at least 2.2 mm away from lead root*

| Parameter | Symbol | Minimum | Maximum | Unit |
|---|---|---|---|---|
| Storage Temperature | Tstg | -40 | +85 | °C |
| Operating Temperature | Top | -40 | +85 | °C |
| Soldering Temperature [1] | Tsld | | +260 [1] | °C |
| Supply Voltage | Vcc | -0.5 | 5.5 | V |
| TX Input Voltage (Data in) | VIN | -0.5 | 5.5 | V |

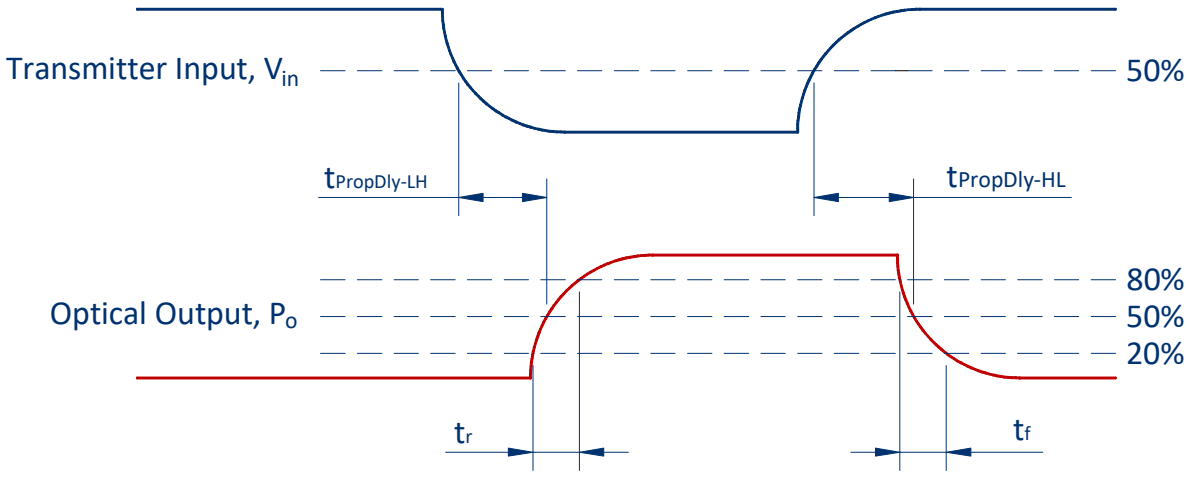


FIGURE 3
Transmitter Propagation Delay and rise/fall time definitions as per inverting application circuit of Figure 2

## SPECIFICATIONS

### Table 6
### TRANSMITTER ELECTRICAL AND OPTICAL CHARACTERISTICS

*Test Conditions:*

1. *Test data was validated over the full temperature range of -40 °C to +85 °C, and over both power supply rail options of 5 V and 3.3 V ± 10%. Typical data out is at 25 °C, with 10 Mbps PRBS data and 3.3 V Supply*
2. *Output power levels are for peak (not average) optical output levels. For 50% duty cycle data, peak optical power is twice the average optical power. Optical power is measured when coupled into 0.5 m of a 1 mm diameter 0.5 NA POF and a large area detector.*
3. *Electrical input pulse width is determined at 1.5 V and dV/dt between 1 V and 2 V shall not be less than 1 V/ns*
4. *Emission Wavelength (centroid) $\lambda_c = \Sigma_i P_i . \lambda_i / \Sigma_i P_i$ (Ref: EIA/TIA std. FOTP-127/6.1, 1991)*
5. *Spectral Width Root Mean Squared (RMS) $\lambda_{RMS} = (\Sigma_i P_i(\lambda_c - \lambda_i)^2 / \Sigma_i P_i)^{1/2}$. (Ref: EIA/TIA std. FOTP-127/6.3, 1991)*
6. *Wake Up Delay is the time from valid power up to valid data output, at 5 V or 3.3 V +/-10%, with input data at 50% duty cycle*
7. *Pins 5 and 8 are used for mounting and retaining purposes only. Connect to ground.*

| Parameter | Symbol | Min | Typical | Max | Unit | Test Condition |
|---|---|---|---|---|---|---|
| Supply Current | Icc | | 12.5 @3V<br>13.5 @5V | 25 | mA | [1] |
| Input Voltage - Low | $V_{IL}$ | -0.3 | | 0.8 | V | [1] |
| Input Voltage - High | $V_{IH}$ | 2.0 | | Vcc + 0.25 | V | [1] |
| Data Input Capacitance | $C_{in}$ | | | 7 | pF | |
| Data Input Resistance | $R_{in}$ | 10 | | | MΩ | |
| Output Power | $P_{High}$ | -6 | | +2 | dBm | [1], [2] |
| Emission Wavelength (centroid) | $\lambda_c$ | 640 | 650 | 680 | nm | [4] |
| Spectral Width (RMS) | $\lambda_{RMS}$ | | | 30 | nm | [5] |
| Optical Rise time (20%-80%) | $t_r$ | | 1.6 | 5 | ns | [1] |
| Optical Fall time (20%-80%) | $t_f$ | | 1 | 2 | ns | [1] |
| Propagation Delay Low-to-High | $t_{PropDly_LH}$ | 13 | 22 | 30 | ns | [1], Figure 3 |
| Propagation Delay High-to Low | $t_{PropDly_HL}$ | 13 | 22 | 30 | ns | [1], Figure 3 |
| TX Pulse Width Distortion | PWD | -5.0 | | +5.0 | ns | [1,4] |
| Wake Up Delay (power up) | $t_{power-on}$ | | 20 | | µs | [6] |

## MECHANICAL DATA, HORIZONTAL

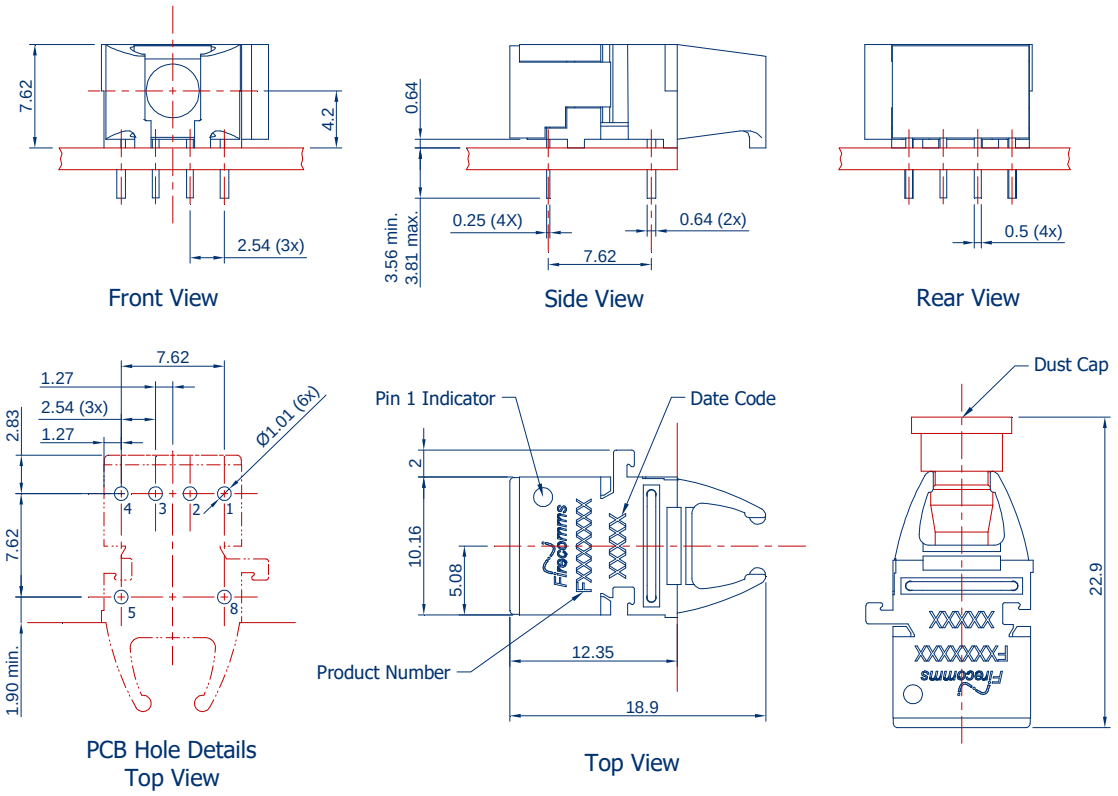


FIGURE 4
Mechanical dimensions of the horizontal connectors and PCB footprint, which is a top view
General dimensional tolerance is ± 0.2 mm

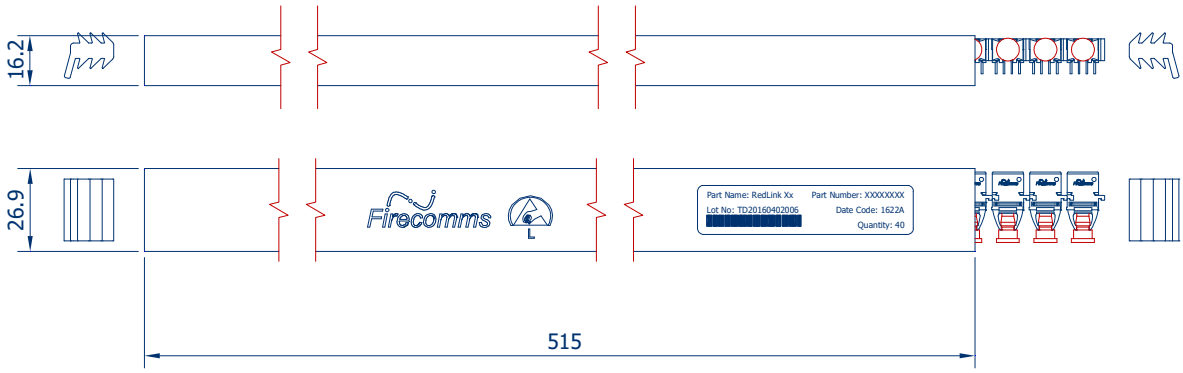


FIGURE 5
Packing tube for Firecomms Horizontal RedLink® Transmitters

## MECHANICAL DATA, VERTICAL

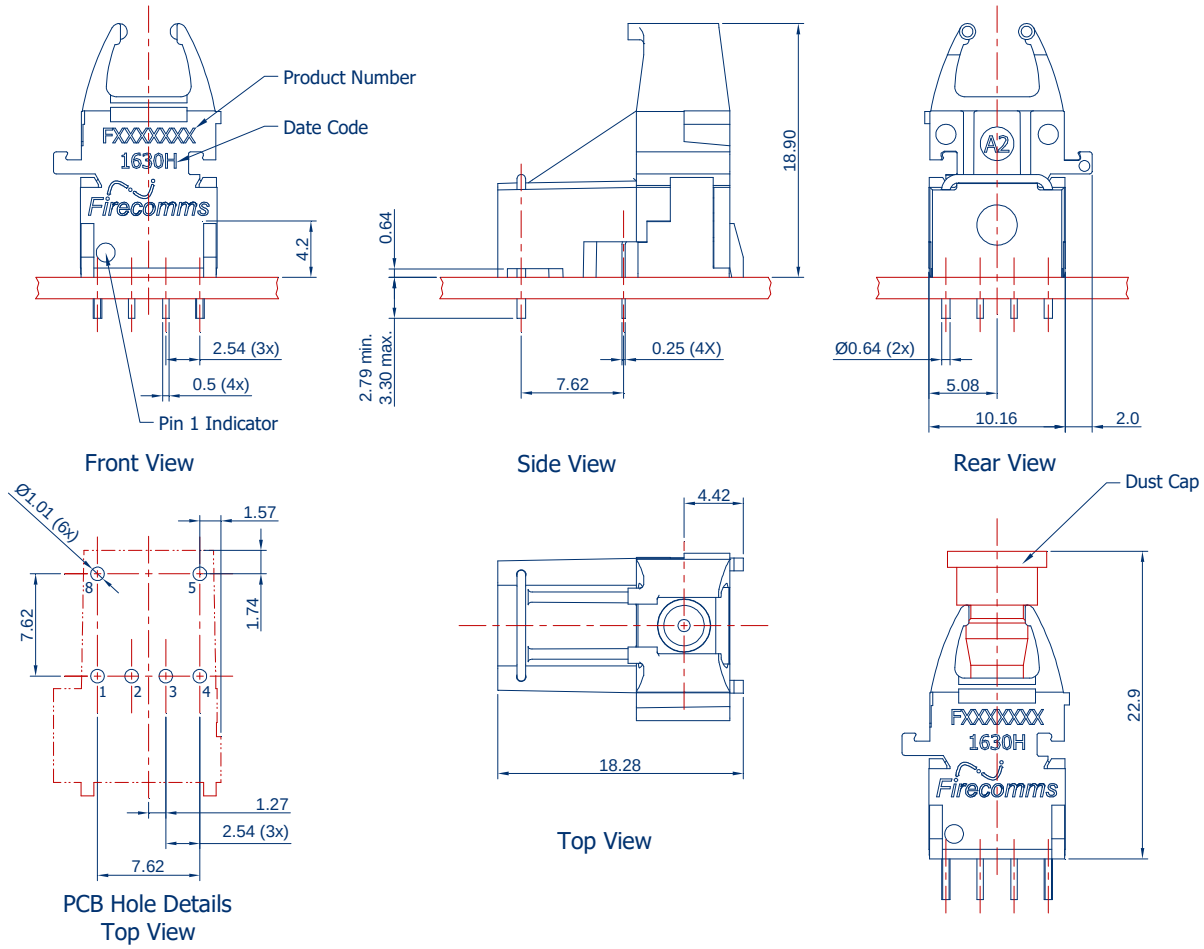


FIGURE 6
Mechanical dimensions of the vertical transmitter connectors and PCB footprint, which is a top view
General dimensional tolerance is ± 0.2 mm

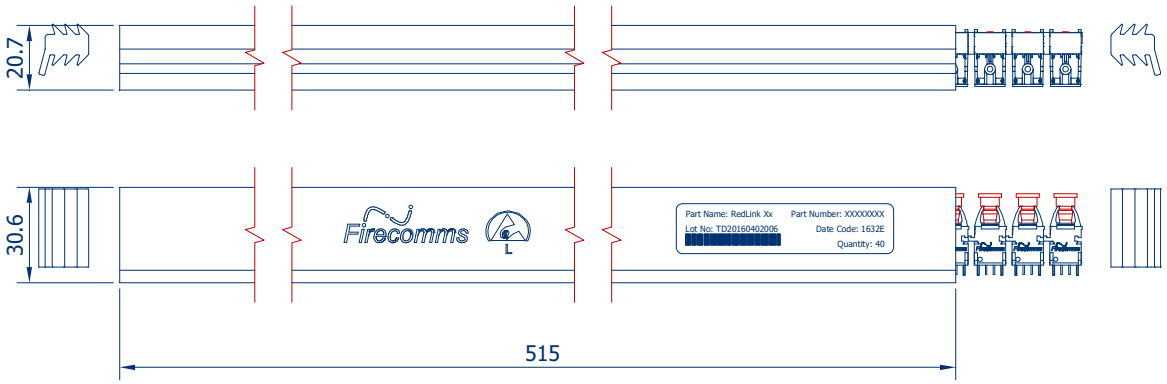


FIGURE 7
Packing tube for Firecomms Vertical RedLink® Transmitters

## MECHANICAL DATA, 30° TILTED

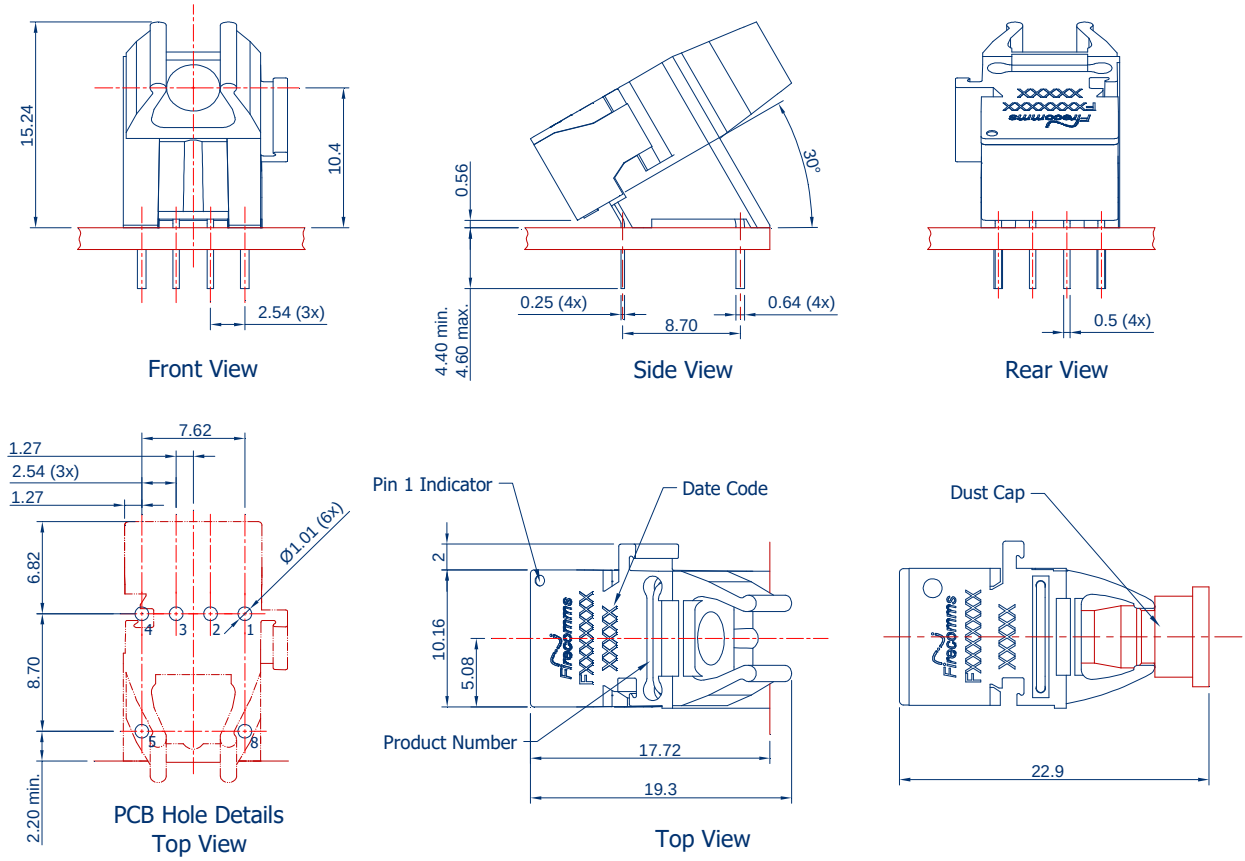


FIGURE 8
Mechanical dimensions of the tilted transmitter connectors and PCB footprint, which is a top view
General dimensional tolerance is ± 0.2 mm

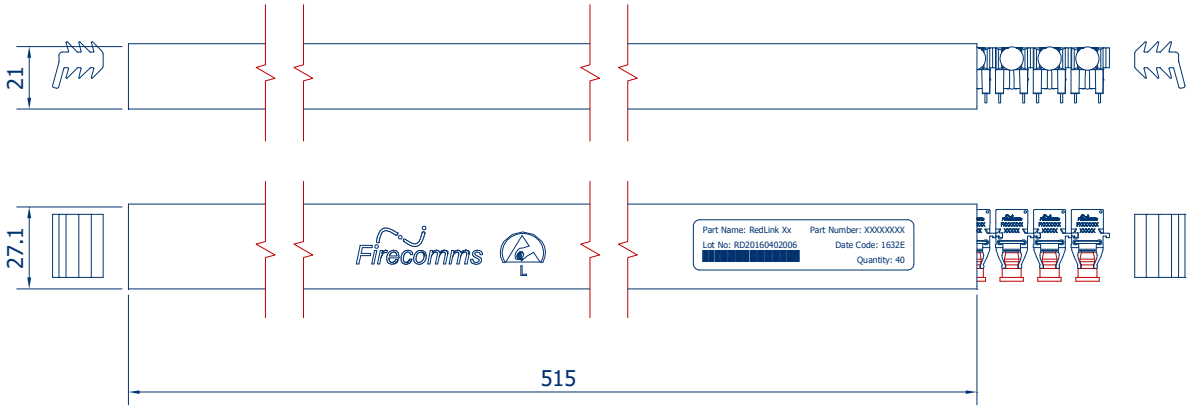


FIGURE 9
Packing tube for Firecomms Tilted RedLink® Transmitter

## PART HANDLING

The Firecomms DC-10 MBd 650 nm RedLink® transmitter devices are color coded gray. They are auto-insertable. They are tested for handling in static-controlled assembly processes (HBM). Cleaning, degreasing and post solder washing should be carried out using standard solutions compatible with both plastics and the environment. For example, recommended solutions for degreasing are alcohols (methyl, isopropyl and isobutyl). Acetone, ethyl acetate, phenol or similar solution based products are not permitted.

In the soldering process, non-halogenated water soluble fluxes are recommended. These products are not suitable for use in reflow solder processes (infrared/vapor-phase reflow). The dust plug should remain in place during soldering, washing and drying processes to avoid contamination of the active optical area of each part.

The Moisture Sensitivity Level (MSL) classification of this device is 2a according to JEDEC J-STD-020. The shelf life of an unopened MBB (Moisture Barrier Bag) is 24 months at < 40 °C and < 90 % R.H. Once the Moisture Barrier Bag is opened the devices can be either

a) Stored in normal factory conditions < 30 °C and < 60 % R.H. for a maximum of 672 hours (4 Weeks) prior to soldering
b) Stored at < 10 % R.H. (Dry Cabinet)

## PACKING INFORMATION

Components are packed in PVC anti-static tubes in moisture barrier bags. Bags should be opened only in static-controlled locations, and standard procedures should be followed for handling moisture sensitive components.

**Table 7**
**PACKING INFORMATION**

| | | Horizontal | Vertical | Tilted |
|---|---|---|---|---|
| Components per Tube | | 40 | 40 | 40 |
| | Tube Length | 515 mm | 515 mm | 515 mm |
| | Tube Height | 16.2 mm | 20.7 mm | 21 mm |
| | Tube Depth | 26.9 mm | 30.6 mm | 27.1 mm |
| Tubes per Bag | | 5 | 5 | 5 |
| Bags per Inner Carton | | 1 | 1 | 1 |
| | Inner Carton Length | 630 mm | 630 mm | 630 mm |
| | Inner Carton Width | 70 mm | 70 mm | 70 mm |
| | Inner Carton Height | 105 mm | 105 mm | 105 mm |
| Weight per Inner Carton, Complete | | 0.77 kg | 0.92 kg | 0.92 kg |
| Components per Inner Carton | | 200 | 200 | 200 |
| Inner Cartons per Outer Carton | | 10 | 10 | 10 |
| | Outer Carton Length | 650 mm | 650 mm | 650 mm |
| | Outer Carton Width | 235 mm | 235 mm | 235 mm |
| | Outer Carton Height | 376 mm | 376 mm | 376 mm |
| Weight per Outer Carton, Complete | | 8.13 kg | 9.60 kg | 9.60 kg |
| Components per Outer Carton | | 2,000 | 2,000 | 2,000 |

For the most recent revision or further information please visit www.firecomms.com or contact the company directly at the following address, Firecomms Ltd, 2200 Airport Business Park, Cork, IRELAND. Copyright© 2004-2018 Firecomms. All rights reserved. Firecomms refers to Firecomms Limited and/or its subsidiaries. Firecomms assumes no responsibility for inaccuracies or omissions in the information contained in this document. Specifications are subject to change without notice. No patent rights are granted to any of the circuits described herein.