Data Sheet

For part # FF-TLPNF07-BLKH
Duplex type Optical Adaptor
PN-F07

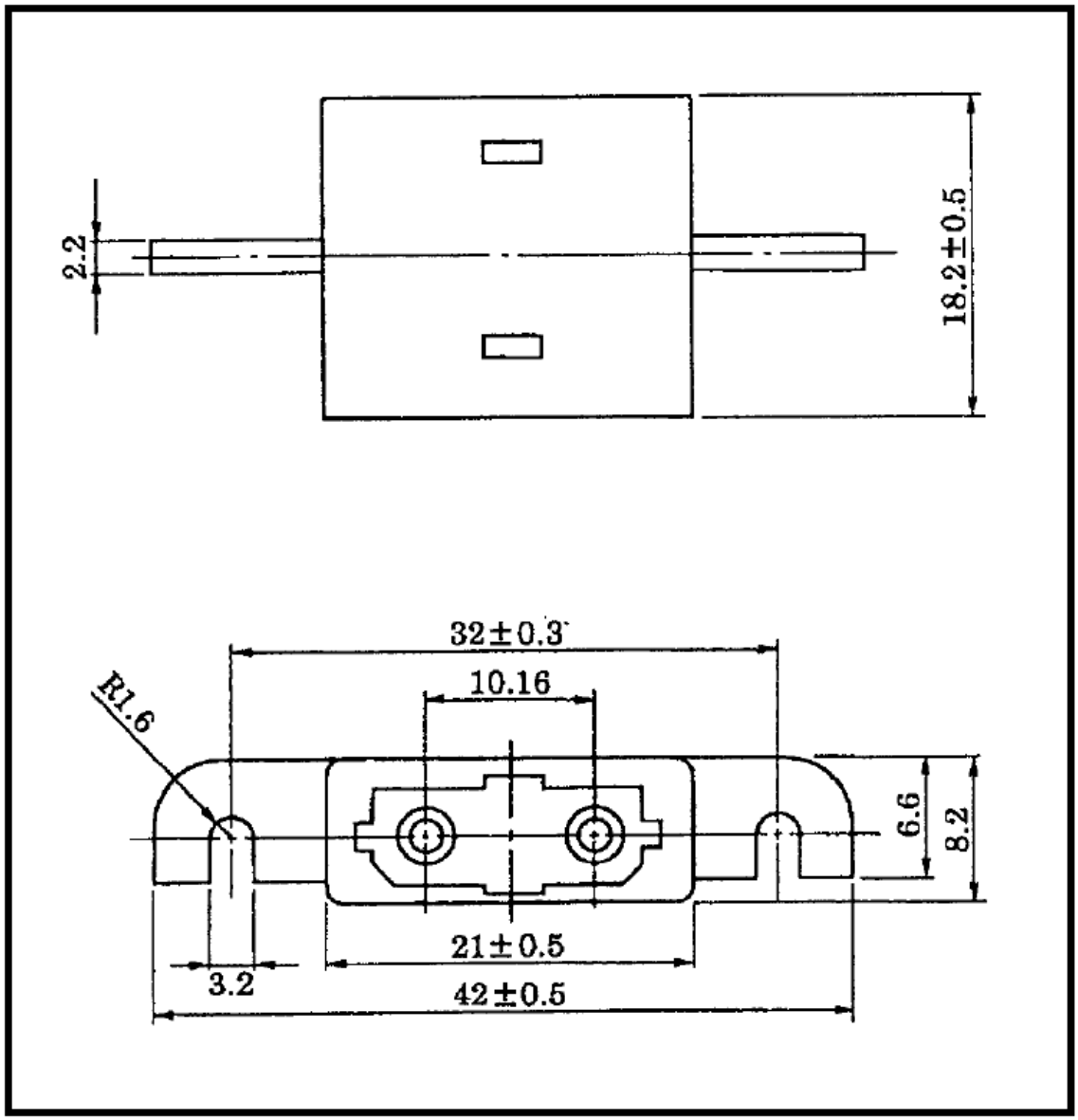

Notes:

***1 typical data at 25deg C**
***2 FiberFin ® factor polish or a very fine 3um field polish**
***3 UNIT of measurement is MM**
***4 Light-Seal ® connector with a 24 Hour cure of 2 part epoxy part# FF-GMEPXY-1656 (Epoxy)**

Tested wave lenght	650nm
Tested Fiber Medium	1mm diameter PMMA .5 na fiber, Duplex
Tested Cable Jacket material	PE
Operating Temperature	-20C to +70C
Storage	-40C to +85C
Sealing level	IP20 (mated)
Durability	500 mating cycles
Typical Insertion loss (avg.)	1.9 dB

Vibration, Shock and Stress

Plastic-molded optical modules are plastic-sealed devices whose wires are fixed with resin. While this structure makes them comparatively resistant to vibration and shock, wire breakage has been observed in equipment in which the module is used when the soldering and connections are exposed to vibration, shock or stress. Therefore, when using a plastic-molded optical module in equipment with high vibration levels, ensure that the structure is designed to withstand vibration, shock and stress.

Handling Optical Fiber Cables

Do not drop heavy or sharp metal objects onto the optical fiber cable. If the fiber cable breaks, data cannot be transmitted. Also, transmission loss increases with sharp bends in the fiber cable. Toshiba recommend that, if the cable must be bent during installation, the bent section should have as large a radius as possible (six to ten times the minimum bending radius). Some fiber-optic connectors are vertical connectors. When inserting a fiber-optic connector, note the directionality of the connection. When coupling or decoupling a fiber optic connector, be sure to hold the connector itself. Do not decouple a fiber-optic connector by pulling on the optical-fiber cord.

Assembling Fiber-Optic Connectors

Since specialized assembly tools are available for the fiber-optic connectors used with TOSLINK devices, people without specialist knowledge can assemble the connectors. However, the person who assembled the product is responsible for its characteristics and quality. When a connector is to be used in an application where reliability is e essential, FiberFin recommends purchasing a pre-assembled product or contacting our specialist with the necessary expertise

Recommended Operating Conditions

The recommended operating conditions are conditions recommended to ensure the operation described in the individual datasheets. To improve the reliability of a device even further, use the device with a derated maximum voltage, current, temperature or other parameter. Note that the recommended operating conditions are intended to guarantee the stated operation and do not always guarantee characteristic values.